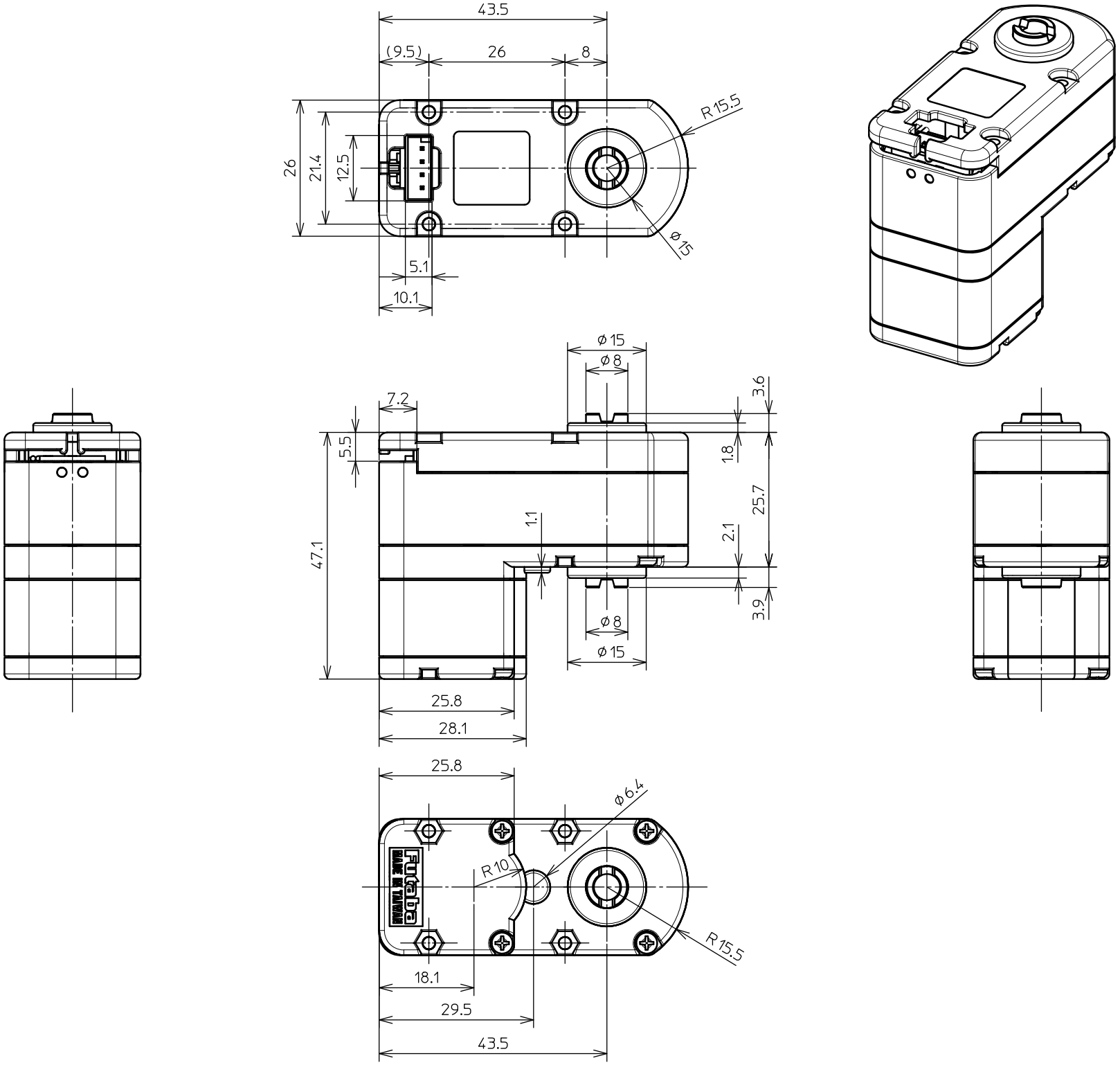
43.5
(9.5)
26
8
R15.5
26
21.4
12.5
ø15
5.1
10.1
ø15
ø8
7.2
3.6
5.5
1.8
25.7
1.1
2.1
47.1
3.9
ø8
ø15
25.8
28.1
25.8
ø6.4
R10
Futaba
MADE IN TAIWAN
R15.5
18.1
29.5
43.5